SECTIONAL VIEWS NO: 02GF0275H30-0

MODEL: 50GF25.5 / 25.5H / 27.5 / 27.5H 3Ø

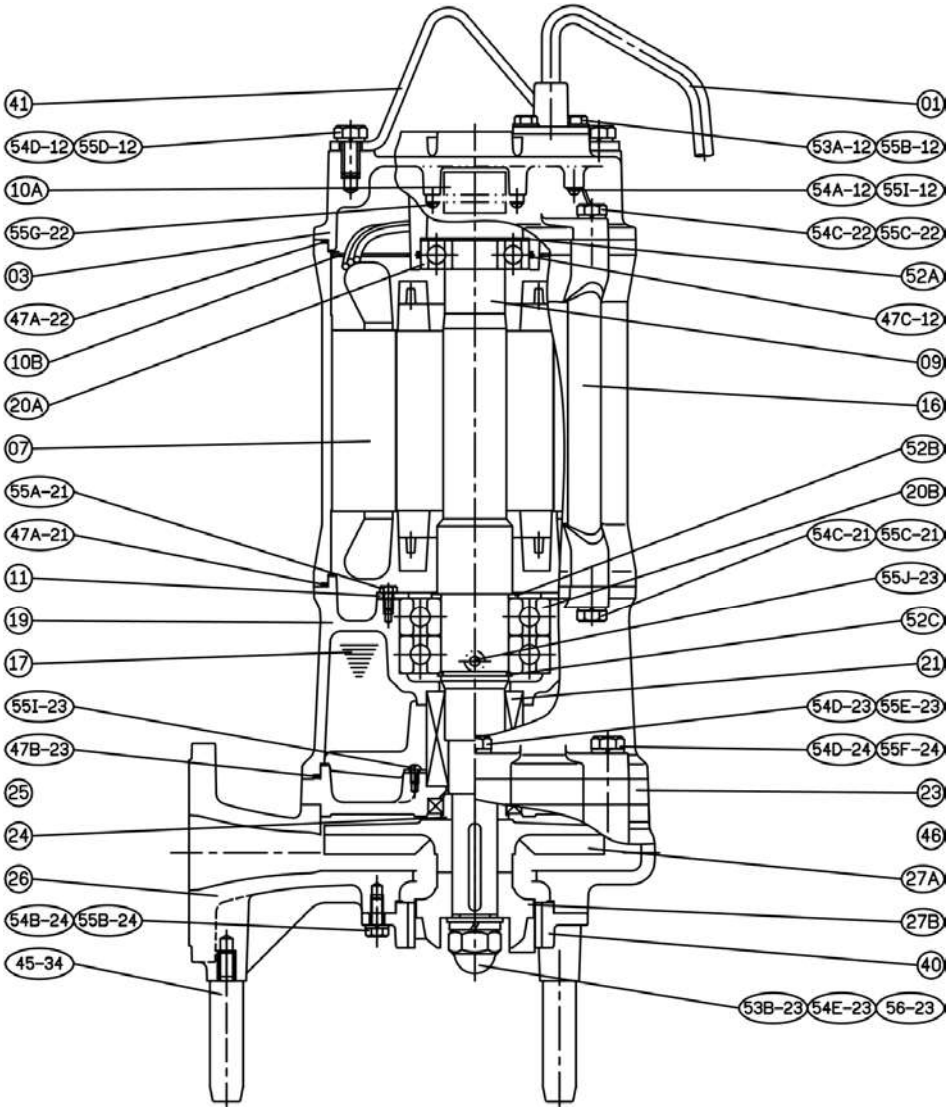

NO.	Part name	Material	QTY
01	Cable		1
03	Upper Cover	FC200	1
07	Stator		1
09	Shaft End	SUS403	1
10A	Auto-cut Protector		1
10B	Protective Plate		1
11	Bearing Fixer	SPCC	1
16	Motor Frame	FC200	1
17	Lubricant		
19	Bearing Bracket	FC200	1
20A	Bearing		1
20B	Bearing		1
21	M. Seal	CA/CE & SiC/SiC	1
23	M. Seal Bracket	FC200	1

NO.	Part name	Material	QTY
24	Oil Seal Bush	SUS403	1
25	Oil Seal	NBR	1
26	Casing	FC200	1
27A	Impeller	FC200	1
27B	Radial Cutter	SUS440C	1
40	Cutter Ring	SUS440C	1
41	Handle	SUS304	1
46	Impeller Key	SUS304	1
47	Gasket Kit		