SECTIONAL VIEWS

No: 03FNP237030-00

MODEL: FN-35P

3Ø

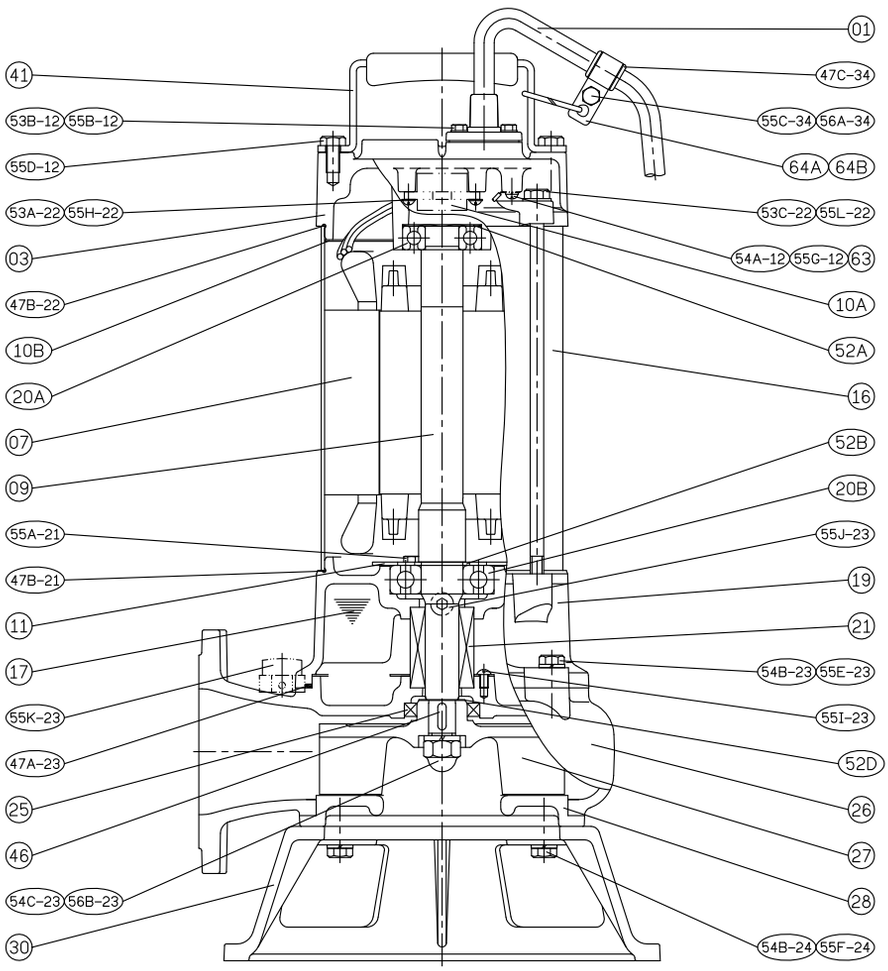

No.	Part name	Material	QTY	Remark
01	Cable		1	
03	Upper cover	FC200	1	
07	Stator		1	
09	Shaft end	SUS403	1	
10A	Auto-cut		1	
10B	Auto-cut plate		1	
11	Bearing fixer	SPCC	1	
16	Motor frame	SUS304	1	
17	Lubricant			
19	Bearing bracket	FC200	1	
20A	Bearing		1	
20B	Bearing		1	
21	M.seal	CA / CE & SiC / SiC	1	

No.	Part name	Material	QTY	Remark
25	Oil seal	NBR	1	
26	Casing	FC200	1	
27	Impeller	FC200	1	
28	Casing cover	FC200	1	
30	Footing	FCD450	1	
41	Handle	SUS304	1	
46	Impeller key	SUS304	1	
47	Packing			